GHG14 COMMON POWERTRAIN CONTROLLER (CPC4) VEHICLE INTERFACE HARNESS (VIH)

18-PIN CONNECTOR #1

1/1	TWO-SPEED AXLE
1/2	PARK BRAKE INTERLOCK
1/3	IDLE VALIDATION SWITCH 2 (THROTTLE ACTIVE)
1/4	ACCELERATOR PEDAL SENSOR GND
1/5	DPF REGENERATION LAMP
1/6	IDLE VALIDATION SWITCH 1 (IDLE ACTIVE)
1/7	ACCELERATOR PEDAL SIGNAL
1/8	ACCELERATOR PEDAL SIGNAL SUPPLY
1/9	TACHOMETER
1/10	STOP ENGINE / AUX SHUTDOWN #1
1/11	LIMITER 0
1/12	SET / COAST ENABLE
1/13	MIL LAMP
1/14	CRUISE CONTROL ENABLE
1/15	STOP ENGINE OVERRIDE
1/16	RESUME / ACCEL ENABLE
1/17	THROTTLE INHIBIT
1/18	RUN START

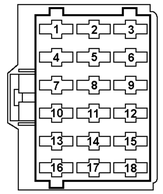

WHITE - FRONT
LOOKING INTO PINS ON THE HARNESS

18-PIN CONNECTOR #2

2/1	MAIN BATTERY (+12V)
2/2	MAIN BATTERY GROUND
2/3	IGNITION
2/4	LIN COM - AMT TRANS
2/5	NOT USED
2/6	NOT USED
2/7	SERVICE BRAKE RELEASED SWITCH
2/8	REMOTE THROTTLE SELECT SWITCH
2/9	REMOTE PTO SWITCH
2/10	AMBER WARNING LAMP
2/11	LIMITER 1
2/12	A/C STATUS
2/13	FAN OVERRIDE
2/14	ENGINE BRAKE LOW
2/15	ENGINE BRAKE MEDIUM
2/16	J1939-
2/17	J1939 SHIELD
2/18	J1939+

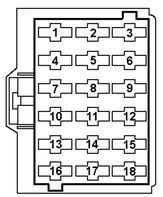

GRAY - FRONT
LOOKING INTO PINS ON THE HARNESS

21-PIN CONNECTOR #3

3/1	OI THERMOSTAT
3/2	SENSOR RETURN
3/3	SENSOR SUPPLY
3/4	REMOTE PTO
3/5	SPARE
3/6	SPARE
3/7	TOP 2 LOCKOUT SOLENOID
3/8	TOP 2 SHIFT SOLENOID
3/9	WATER-IN-FUEL INDICATOR
3/10	DEF LOW LAMP
3/11	LOW COOLANT LEVEL SENSOR
3/12	FUEL FILTER RESTRICTION LAMP
3/13	VEHICLE SPEED (+)
3/14	VEHICLE SPEED (-)
3/15	AMBIENT AIR TEMPERATURE SENSOR
3/16	RED STOP LAMP
3/17	OI ALARM
3/18	NOT USED
3/19	ENGINE CAN (-)
3/20	ENGINE CAN SHIELD
3/21	ENGINE CAN (+)

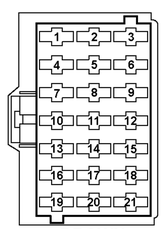

BROWN
FRONT
LOOKING INTO PINS ON THE HARNESS

18-PIN CONNECTOR #4

4/1	NOT USED
4/2	NOT USED
4/3	NOT USED
4/4	SPARE
4/5	SPARE
4/6	WAIT TO START LAMP (STARTER INTERRUPT)
4/7	HIGH EXHAUST SYSTEM TEMP LAMP
4/8	CLUTCH RELEASED
4/9	OI ACTIVE LAMP
4/10	VEHICLE POWER SHUTDOWN
4/11	SPARE
4/12	VEHICLE SPEED OUTPUT
4/13	DPF INHIBIT
4/14	DUAL ANALOG THROTTLE PEDAL SENSOR 2
4/15	SPARE
4/16	NEUTRAL SWITCH
4/17	REGEN SWITCH
4/18	HOOD TILT SWITCH

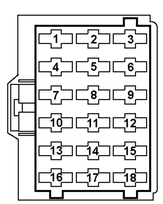

BLUE
FRONT
LOOKING INTO PINS ON THE HARNESS

GOVERNOR

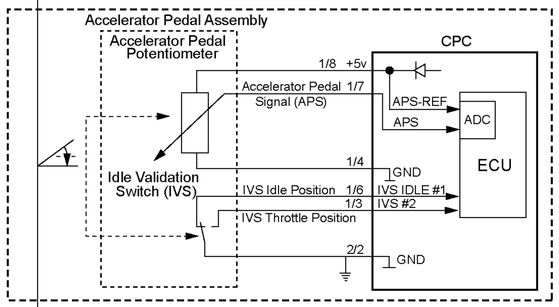

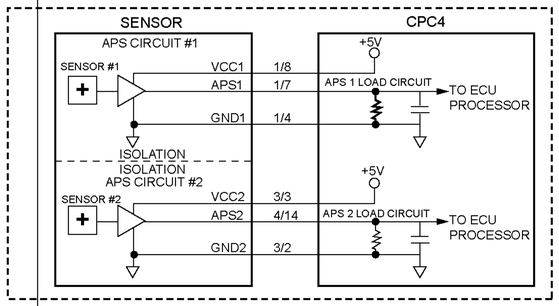

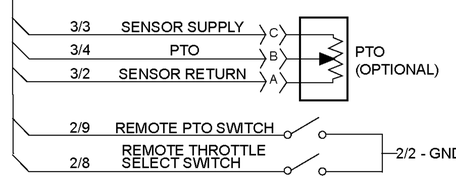

OEM-MCM 10-PIN CONNECTOR

CAVITY	LABEL
1	PV HIGH SIDE SUPPLY
2	FAN 1
3	FAN 2
4	FAN SPEED SENSOR
5	SENSOR GND
6	SENSOR POWER SUPPLY
7	FAN TEMP SWITCH
8	NC
9	NC
10	NC

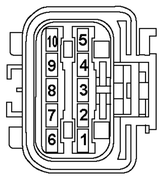

FRONT
LOOKING INTO PINS ON THE HARNESS

CRUISE CONTROL

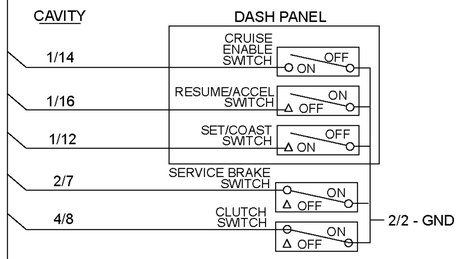

VEHICLE SPEED SENSOR

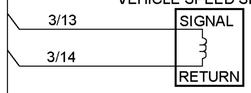

TOP 2 TRANSMISSION

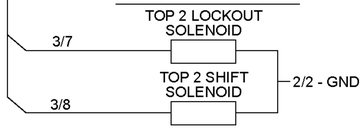

OEM-MCM 21-PIN CONNECTOR

CAVITY	LABEL
M21/1	NOT USED
M21/2	NOT USED
M21/3	NOT USED
M21/4	NOT USED
M21/5	
M21/6	
M21/7	
M21/8	
M21/9	
M21/10	ENGINE CAN SHIELD
M21/11	
M21/12	
M21/13	ENGINE CAN (+)
M21/14	
M21/15	
M21/16	NOT USED
M21/17	NOT USED
M21/18	NOT USED
M21/19	ENGINE CAN (-)
M21/20	RUN/START
M21/21	STARTER
	MCM ENGINE START ONLY

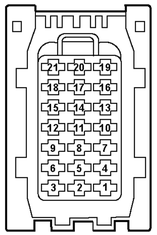

FRONT
LOOKING INTO PINS ON THE HARNESS

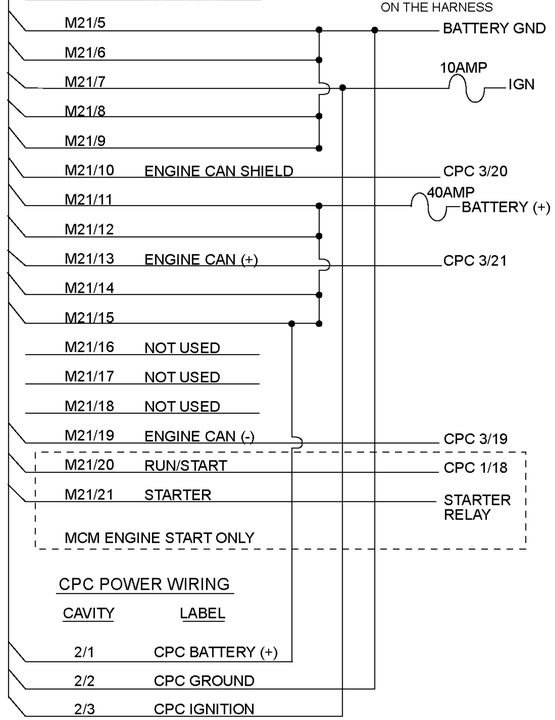

CPC POWER WIRING

CAVITY	LABEL
2/1	CPC BATTERY (+)
2/2	CPC GROUND
2/3	CPC IGNITION

ENGINE COOLANT LEVEL SENSOR - SHUTDOWN

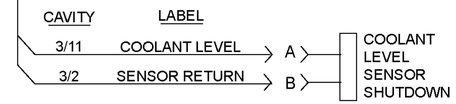

DIAGNOSTIC CONNECTOR - REQUIRED

CAVITY	DDC CONNECTOR	LABEL
-	A	GND
-	B	+12 V
2/18	C	J1939 DATA LINK (+)
2/16	D	J1939DATA LINK (-)
2/17	E	J1939 SHIELD
2/5	F	PLUG
2/6	G	PLUG
-	H	PLUG
-	J	PLUG

INSTRUMENT PANEL

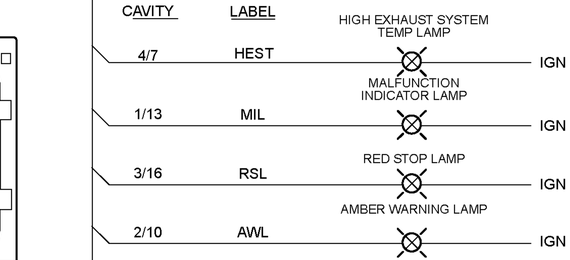

SWITCHES

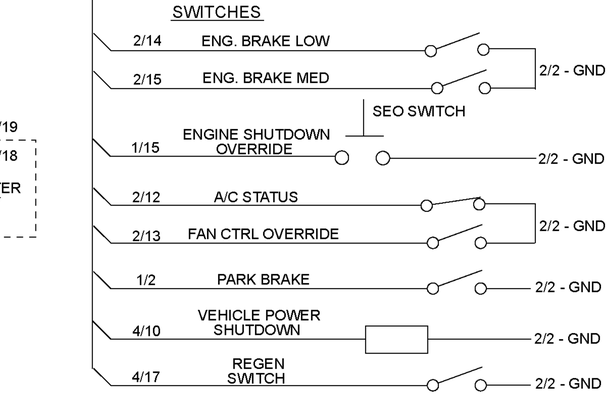

All information subject to change without notice

DDC-SVC-OTH-0060 Copyright © 2013 DETROIT DIESEL CORPORATION

d150062b